# FIG.Z 06 TTTG PN16 DN15/200 F4-F5

DS-4899
Rev.2
For Reference ☑
For Approval ☐

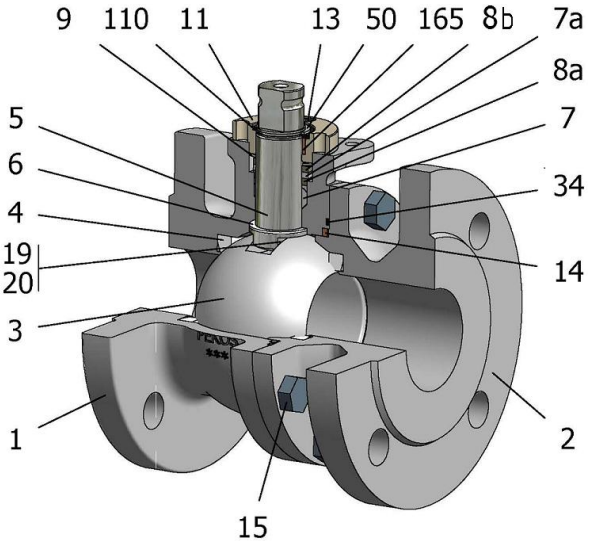


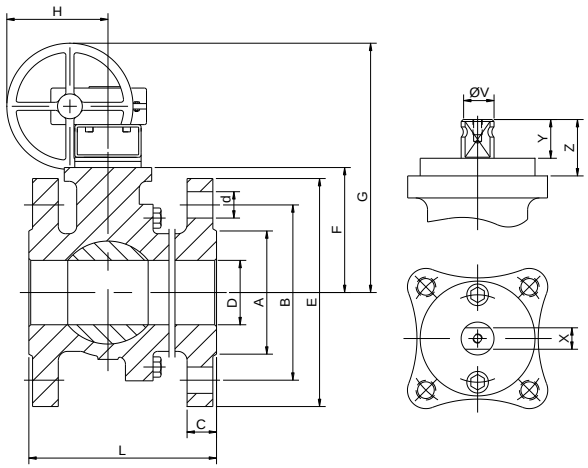


| Position | Description | Material |
|---|---|---|
| 01 | Body 1 | S.S. 1.4408 |
| 02 | Body 2 | S.S. 1.4408 |
| 03 | Ball | S.S. 1.4408 |
| 04 | Seat | PTFE (modified) |
| 05 | Stem | S.S. 1.4401 |
| 06 | Stem seal | PTFE (modified)+FG |
| 07 | Stem packing | PTFE (modified) |
| 07a | Stem packing 2 | Graphite |
| 08a | Gland packing 1 | S.S. 1.4401 |
| 08b | Gland packing 2 | S.S. 1.4401 |
| 09 | Spring washer | S.S. 1.4310 |
| 11 | Cover | S.S. 1.4408 |
| 13 | Cover bolt | A4-70 |
| 14 | Body seal 1 | PTFE (modified) |
| 15 | Body bolt | A4-70 |
| 19 | Spring | S.S. 1.4401 |
| 20 | Antistatic ball | S.S. 1.4401 |
| 34 | Body seal 2 | Graphite |
| 50 | Subjection ring | S.S. 1.4301 |
| 110 | Subjection ring seal | S.S. 1.4401 Nitrided |
| 165 | Stem bearing | PTFE (modified)+FG |

## General features

Floating ball.
Split body.
Full bore.
Soft seat.
Bidirectional.
Anti Blow out proof stem.
Autoadjustable packing.
Anti static device.
Self-cavity pressure relief.

## Standards

Top flange ISO 5211
Flanges EN 1092-01
Face to face EN 558
Testing EN-12266, ISO 5208
Design EN-12516, ISO 17292

## Official approvals

CERTIFICATE FIRE SAFE
TÜV.AD-MERKBLATT A4
TA-LUFT VDI 2440
ISO 15848-1
ATEX 2014/34/EU
PED 2014/68/EU
SIL 3 CAPABLE
EN 161/EN ISO 23553-1

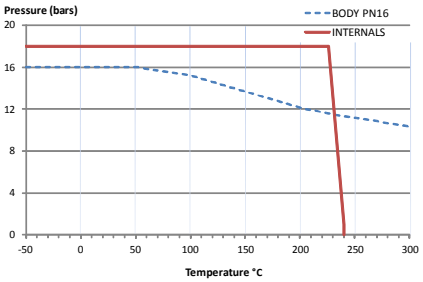


**PEKOS GROUP CERTIFICATES:**
ISO 9001: 2015 / 2014/68/EU /API-6D

## DIMENSIONS & Technical information

| DN | PN | D | L | E | A | B | C | F | H | G | V | X | Y | Z | n x d | ISO 5211 | Torque | MAST | Weight |
|---|---|---|---|---|---|---|---|---|---|---|---|---|---|---|---|---|---|---|---|
| 15 | 16 | 15 | 115 | 95 | 45 | 65 | 16 | 51 | - | - | 14 | 11 | 11 | 13,5 | 4 x 14 | F05 | 8 | 44 | 3 |
| 20 | 16 | 20 | 120 | 105 | 58 | 75 | 18 | 53 | - | - | 14 | 11 | 11 | 13,5 | 4 x 14 | F05 | 10 | 44 | 4 |
| 25 | 16 | 25 | 125 | 115 | 68 | 85 | 18 | 59 | - | - | 18 | 14 | 17 | 19,5 | 4 x 14 | F05 | 14 | 95 | 5 |
| 32 | 16 | 32 | 130 | 140 | 78 | 100 | 18 | 64 | - | - | 18 | 14 | 17 | 19,5 | 4 x 18 | F05 | 21 | 95 | 6 |
| 40 | 16 | 40 | 140 | 150 | 88 | 110 | 18 | 75 | 271 | 366 | 22 | 17 | 20 | 30 | 4 x 18 | F07 | 31 | 250 | 8 |
| 50 | 16 | 50 | 150 | 165 | 102 | 125 | 18 | 83 | 271 | 374 | 22 | 17 | 20 | 30 | 4 x 18 | F07 | 46 | 250 | 11 |
| 65 | 16 | 65 | 170 | 185 | 122 | 145 | 18 | 96 | 271 | 387 | 22 | 17 | 20 | 30 | 8 x 18 | F07 | 55 | 250 | 17 |
| 80 | 16 | 80 | 180 | 200 | 138 | 160 | 20 | 114 | 271 | 435 | 28 | 22 | 22 | 40 | 8 x 18 | F10 | 85 | 523 | 22 |
| 100 | 16 | 100 | 190 | 220 | 158 | 180 | 20 | 128 | 271 | 449 | 28 | 22 | 22 | 40 | 8 x 18 | F10 | 110 | 523 | 30 |
| 125 | 16 | 125 | 325 | 250 | 188 | 210 | 22 | 158 | 271 | 479 | 36 | 27 | 35 | 50 | 8 x 18 | F12 | 240 | 1073 | 56 |
| 150 | 16 | 150 | 350 | 285 | 212 | 240 | 22 | 175 | 271 | 496 | 36 | 27 | 35 | 50 | 8 x 22 | F12 | 380 | 1073 | 75 |
| 200 | 16 | 201 | 400 | 340 | 268 | 295 | 24 | 245 | 271 | 566 | 48 | 36 | 40 | 63 | 12 x 22 | F14 | 540 | 2544 | 134 |

*** Depending on service conditions.* ** Dimensions are in mm.* ** Torque & MAST are in Nm.* ** Weight is in Kilograms*
** Torque values have been measured ΔP at maximum rating at room temperature*

*-The contents of this document are subject to change without prior notice due to the continuous development processes*


PICON ROBINETTERIE INDUSTRIELLE

**PICON Robinetterie**
290 chemin du Clapet, ZI de la Villette, 73490 La Ravoire - France
www.picon-robinetterie.fr | E-mail : contact@picon-robinetterie.fr
Tél : 04 79 72 89 22 | Fax : 04 79 72 76 09