FIG.Z 24 TTTG PN16 DN15-200 F1

DS-241
Rev.11
For Reference ☑
For Approval ☐

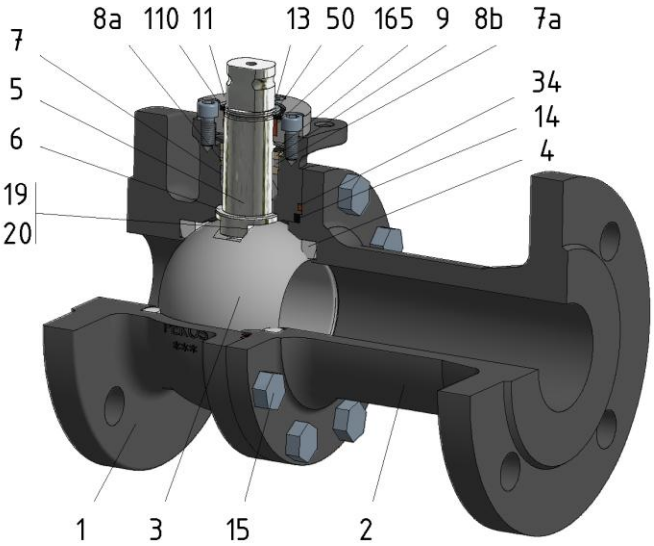

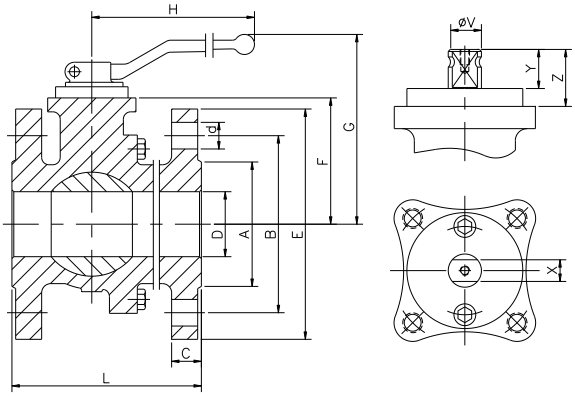

Position	Description	Material
01	Body 1	C.S. 1.0619
02	Body 2	C.S. 1.0619
03	Ball	S.S. 1.4408
04	Seat	PTFE (modified)
05	Stem	S.S. 1.4401
06	Stem seal	PTFE (modified)+FG
07	Stem packing	PTFE (modified)
07a	Stem packing 2	Graphite
08a	Gland packing 1	S.S. 1.4401
08b	Gland packing 2	S.S. 1.4401
09	Spring washer	S.S. 1.4310
11	Cover	S.S. 1.4408
13	Cover bolt	A4-70
14	Body seal 1	PTFE (modified)
15	Body bolt	A2-70
16	Handle	WCB
17	Handle bolt	1.045(8.8)
19	Spring	S.S. 1.4401
20	Antistatic ball	S.S. 1.4401
34	Body seal 2	Graphite
50	Subjection ring	S.S. 1.4021
110	Subjection ring seal	S.S. 1.4401 Nitrided
165	Stem bearing	PTFE (modified)+FG

General features

Floating ball.
Split body.
Full bore.
Soft seat.
Bidirectional.
Anti Blow out proof stem.
Autoadjustable packing.
Anti static device.
Self-cavity pressure relief.

Standards

Top flange ISO 5211
Flanges EN 1092-01
Face to face EN 558
Testing EN-12266, ISO 5208
Design EN-12516, ISO 17292

Official approvals

CERTIFICATE FIRE SAFE
TÜV.AD-MERKBLATT A4
TA-LUFT VDI 2440
ISO 15848-1
ATEX 2014/34/EU
PED 2014/68/EU
SIL 3 CAPABLE
EN 161/EN ISO 23553-1

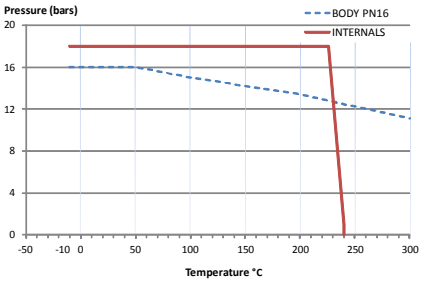

PEKOS GROUP CERTIFICATES:
ISO 9001-2008 / 2014/68/EU /API-6D

DIMENSIONS & Technical information

DN	PN	D	L	E	A	B	C	F	H	G	V	X	Y	Z	n x d	ISO 5211	Torque	MAST	Weight
15	16	15	130	95	45	65	16	51	185	105	14	11	11	13,5	4 x 14	F05	8	44	3
20	16	20	150	105	58	75	18	53	185	107	14	11	11	13,5	4 x 14	F05	10	44	4
25	16	25	160	115	68	85	18	59	185	113	18	14	17	19,5	4 x 14	F05	14	95	5
32	16	32	180	140	78	100	18	64	185	118	18	14	17	19,5	4 x 18	F05	21	95	7
40	16	40	200	150	88	110	18	75	293	145	22	17	20	30	4 x 18	F07	31	250	9
50	16	50	230	165	102	125	18	83	293	153	22	17	20	30	4 x 18	F07	46	250	13
65	16	65	290	185	122	145	18	96	293	166	22	17	20	30	8 x 18	F07	55	250	20
80	16	80	310	200	138	160	20	114	450	205	28	22	22	40	8 x 18	F10	85	523	26
100	16	100	350	220	158	180	20	128	450	220	28	22	22	40	8 x 18	F10	110	523	34
125	16	125	400	250	188	210	22	158	740	267	36	27	35	50	8 x 18	F12	240	1073	68
150	16	150	480	285	212	240	22	175	740	284	36	27	35	50	8 x 22	F12	380	1073	94
200	16	200	600	340	268	295	24	245	750	362	48	36	40	63	12 x 22	F14	540	2544	164

*** Depending on service conditions.* ** Dimensions are in mm.* ** Torque & MAST are in Nm.* ** Weight is in Kilograms*
** Torque values have been measured ΔP at maximum rating at room temperature*

The contents of this document are subject to change without prior notice due to the continuous development processes

PICON ROBINETTERIE INDUSTRIELLE

PICON Robinetterie
290 chemin du Clapet, ZI de la Villette, 73490 La Ravoire - France
www.picon-robinetterie.fr | E-mail : contact@picon-robinetterie.fr
Tél : 04 79 72 89 22 | Fax : 04 79 72 76 09